VALENCIA desk lamp

VALENCIA is an asymmetrical desk lamp for workplaces where functionality and design are key. Materials: Steel, aluminium, plastic.

Output/light source/luminous flux:	*6W LED 530 lumens, replaceable LED*
Energy efficiency:	*85 lumens/watt*
Colour temperature:	*3100 K*
Colour reproduction:	*80 Ra*
Lighting intensity:	*1800 Lux (40 cm)*
Energy efficiency class:	*F*
Dimmer:	*3-stage variable touch dimmer*
Timer:	*2, 4, 9 h*

Model	Colour	Article no.
VALENCIA with foot	White	775802
VALENCIA with foot	Black	775800
VALENCIA with clamp	Black	775900
Optional extras	Colour	Article no.
Clamp	White	775759
Clamp	Black	775761

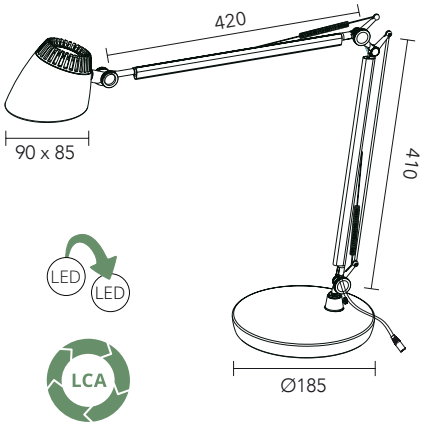

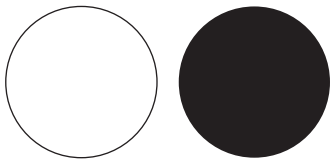

White Black

Matting AB Box 514, SE-441 15 Alingsås | **Tel:** +46 322 67 08 00
E-mail: info@matting.se | **www.matting.se**

MATTING